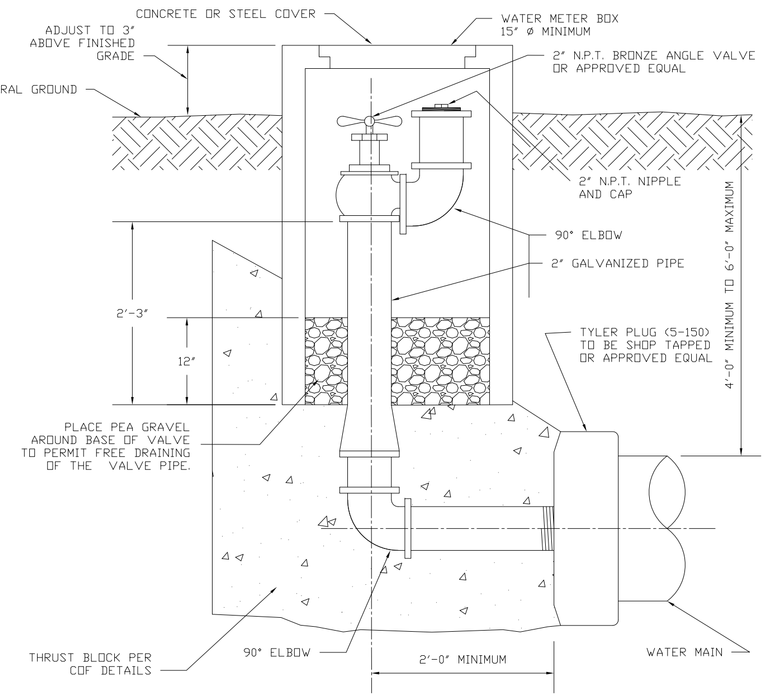

BLOW-OFF VALVE ASSEMBLY

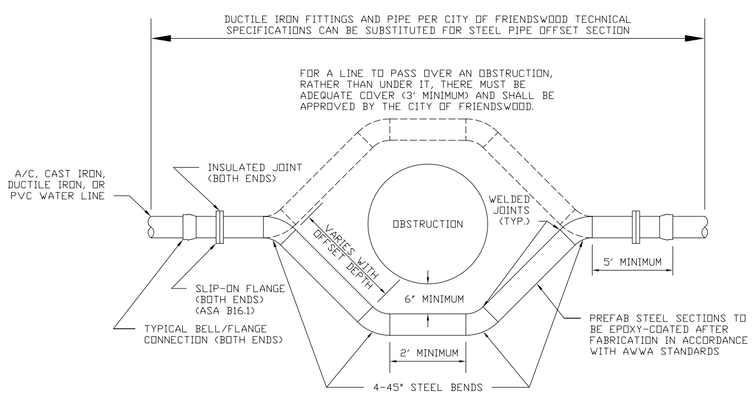

MINIMUM WALL THICKNESS FOR PIPE AND FITTINGS	
4"	0.250"
6"	0.280"
8"	0.322"
≥ 12"	0.375"

TYPICAL STEEL SECTION FITTINGS	
QTY.	DESCRIPTION
4	ø" X 45° STEEL BENDS
2	ø" BELL-FLANGE ADAPTERS
2	ø" SLIP-ON FLANGES 150#
2	ø" INSULATED JOINT KITS

STEEL PIPE OFFSET SECTION

1. ALL MATERIALS AND COATINGS SHALL BE IN ACCORDANCE WITH THE CITY OF FRIENDSWOOD TECHNICAL SPECIFICATIONS.
2. RESTRAIN EXISTING PIPING BEYOND STEEL SECTION AS REQUIRED TO PREVENT MOVEMENT.
3. INSULATED JOINT SHALL BE MADE UP USING INSULATING GASKETS, PLASTIC BOLT SLEEVES AND WASHERS OF INSULATING GASKET MATERIAL BACKED WITH STAINLESS STEEL WASHERS OR OTHER METHODS APPROVED BY THE CITY ENGINEER.
4. NO FIELD FABRICATION OR INTERIOR COATING OF STEEL WATER PIPE OFFSETS ALLOWED.

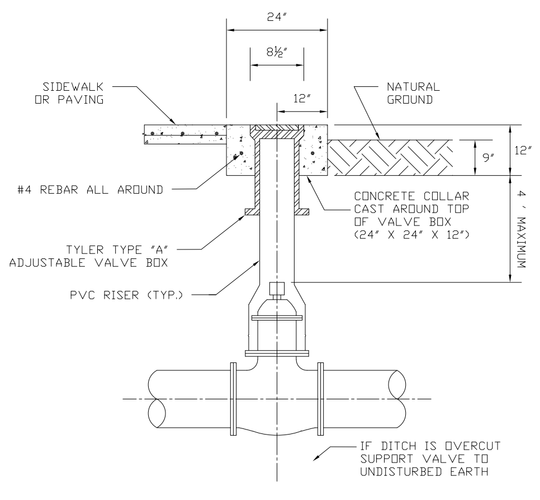

VALVE BOX INSTALLATION

ALL FLUSHING AND GATE VALVES TO BE MECHANICAL JOINT AWWA STANDARD COUNTER-CLOCKWISE OPENING WITH RESILIENT SEATS.

SIZE	90° BEND		45° BEND		22 ½° BEND		TEES		PLUGS	
	A	B	A	B	A	B	A	B	A	B
4"	10"	7"	6"	7"	3"	7"	7"	7"	10"	20"
6"	15"	10"	8"	10"	6"	8"	10"	12"	10"	21"
8"	22"	13"	12"	13"	8"	10"	13"	16"	12"	28"
10"	28"	17"	14"	17"	10"	15"	16"	20"	14"	30"
12"	29"	21"	16"	21"	11"	18"	18"	24"	16"	41"
14"	35"	24"	18"	24"	12"	20"	22"	27"	18"	45"
16"	38"	27"	21"	27"	12"	24"	24"	30"	20"	54"

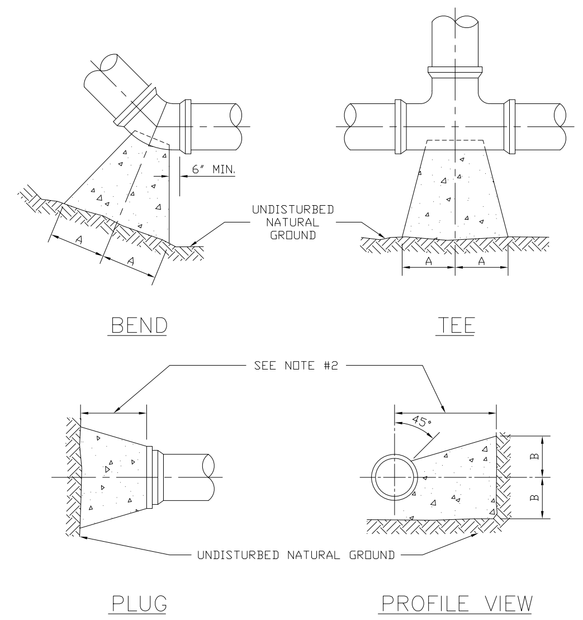

THRUST BLOCK

NOTES:

1. THRUST BLOCKS AT TRENCH FACE SHALL HAVE A MINIMUM BEARING SURFACE OF 10 SF AND THE LEAST DIMENSION SHALL BE NO SMALLER THAN 1.5 TIMES PIPE DIAMETER.
2. FROM THE BACK OF PIPE TO THE TRENCH WALL SHALL BE A MINIMUM OF 18" FOR PIPE DIAMETERS OF 10 INCHES AND LESS, AND A MINIMUM OF 24" FOR PIPE DIAMETERS OF 12 INCHES OR GREATER.
3. ALL CONCRETE SHALL BE CLASS "C", 2,500 PSI AS PER CITY OF FRIENDSWOOD TECHNICAL SPECIFICATIONS.

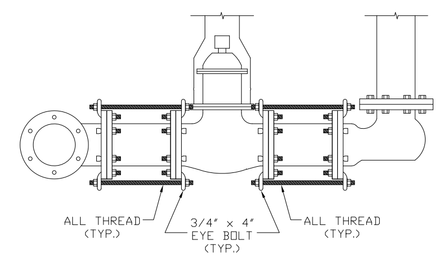

FIRE HYDRANT ASSEMBLY

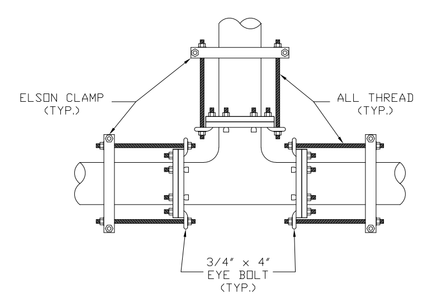

TEE

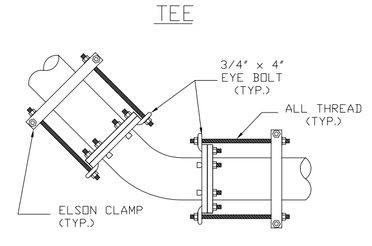

BEND

FITTING ANCHORS

NOTES:

1. MEGA-LUGS MAY BE USED IN PLACE OF ELSON CLAMPS AND ALL THREAD TO RESTRAIN JOINTS.
2. ALL NUTS, WASHERS AND ALL THREAD SHALL BE STAINLESS STEEL.

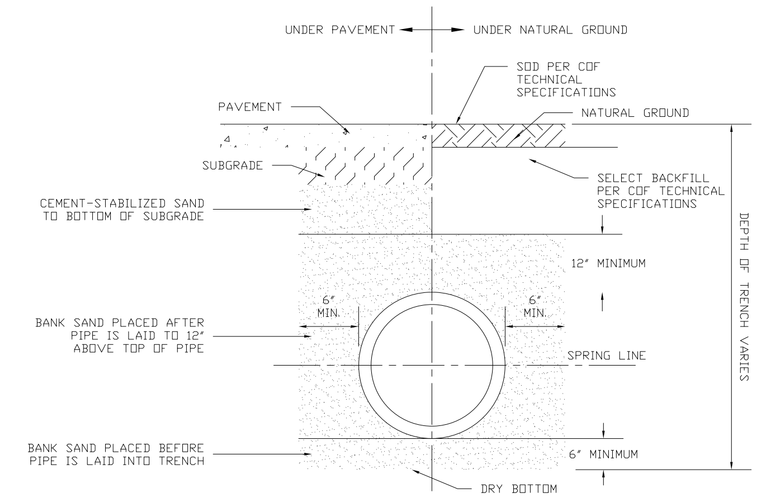

BEDDING AND BACKFILL

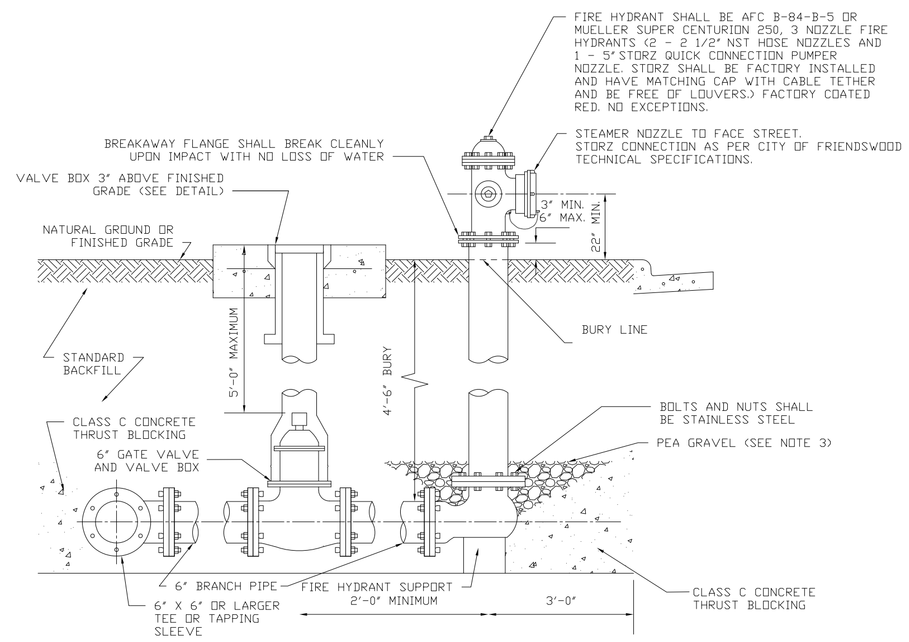

FIRE HYDRANT ASSEMBLY

1. RESTRAINED JOINTS SHALL BE USED (SEE FITTING ANCHOR DETAIL).
2. FIRE HYDRANTS SHALL BE AUDITED AND PAINTED ACCORDING TO THE CITY OF FRIENDSWOOD TECHNICAL SPECIFICATIONS.
3. FILL PEA GRAVEL TO A MINIMUM DEPTH OF 6" OVER TOP OF FLANGE.

WATER LINE CONSTRUCTION NOTES

1. WATER LINE CONSTRUCTION AND TESTING SHALL BE PERFORMED IN ACCORDANCE WITH THE CITY OF FRIENDSWOOD TECHNICAL SPECIFICATIONS.
2. ALL WATER MAINS SHALL HAVE A MINIMUM OF FOUR (4) FEET OF COVER MEASURED FROM CENTERLINE OF STREET OR EXISTING NATURAL GROUND, WHICHEVER DEPTH IS GREATER, UNLESS OTHERWISE NOTED.
3. HYDROSTATIC TESTING FOR MAIN DISTRIBUTION AND DOMESTIC SERVICES LINES SHALL BE AT ONE HUNDRED AND FIFTY (150) PSI FOR FOUR (4) HOURS AND SHALL BE WITNESSED BY THE CITY OF FRIENDSWOOD ENGINEERING DEPARTMENT (SECTION 01475 – TESTING PROCEDURES).
4. SINGLE METER SERVICE LINES SHALL BE ONE (1) INCH MINIMUM I.D., C.T.S, POLYETHYLENE, SDR-9.
5. CONTRACTOR TO FURNISH AND INSTALL SINGLE SERVICE METER BOXES AT FINISHED GRADE.
6. FIRE HYDRANT ASSEMBLIES SHALL INCLUDE ONE (1) EACH LINE SIZE BY SIX (6) INCH TEE, ONE (1) EACH SIX (6) INCH GATE VALVE AND ADJUSTABLE BOX, ONE (1) EACH FIRE HYDRANT WITH SIX (6) INCH LEAD PIPING AND TIE BACKS.
7. WATER VALVES ON MAIN LINES SHALL BE LOCATED AS CLOSE AS POSSIBLE TO EXTENDED PROPERTY LINE AND SHALL CONFORM TO AWWA C500, OPEN COUNTER CLOCKWISE LEFT, EQUIPPED WITH TWO (2) INCH SQUARE OPERATING NUT.
8. WATER LINES FOUR (4) INCH THROUGH TWELVE (12) INCH I.D. SHALL COMPLY WITH ALL THE REQUIREMENTS OF AWWA STANDARD C900-75 CLASS 150, SDR-18 PVC, WHICH HAS AN OUTSIDE DIAMETER EQUAL TO CAST IRON PIPE OF THE SAME INSIDE DIAMETER, WITH GASKET BELL END.
9. ALL CONCRETE THRUST BLOCKING SHALL BE PLACED TO FORM A SOLID CONNECTION BETWEEN FITTINGS, VALVES, FIRE HYDRANTS AND UNDISTURBED EARTH. CONCRETE THRUST BLOCKING SHALL BE CLASS "C" CONCRETE WITH A MINIMUM OF 2,500 PSI COMPRESSIVE STRENGTH AFTER TWENTY-EIGHT (28) DAYS. ALL BOLTS AND NUTS AT FITTINGS AND FIRE HYDRANTS SHALL BE COVERED WITH PLASTIC BEFORE THRUST BLOCK IS PLACED.
10. GRAY IRON AND DUCTILE IRON FITTINGS SHALL CONFORM TO AWWA C110 AND END JOINTS OF FITTINGS AND MAIN VALVES SHALL CONFORM TO AWWA C110. ALL FITTINGS SHALL BE MECHANICAL JOINTS, CEMENT LINED OR EPOXY COATED.
11. MINIMUM BURY FOR ALL FIRE HYDRANT LEADS SHALL BE FOUR (4) FEET UNLESS OTHERWISE NOTED. ALL FIRE HYDRANTS AND VALVE BOXES ARE TO BE ADJUSTED TO FINISH GRADE AFTER PAVING IS COMPLETE.
12. INSTALL CONCRETE BLOCK BENEATH FIRE HYDRANT LEADS BEFORE PLACING CONCRETE THRUST BLOCKING TO INSURE THAT FIRE HYDRANTS ARE INSTALLED LEVEL.
13. CONTRACTOR SHALL CONTACT THE CITY'S PROJECT MANAGER A MINIMUM OF SEVENTY-TWO (72) HOURS PRIOR TO START OF CONSTRUCTION.
14. ALL WATER LINE TRENCHES TO BE BACKFILLED TO ONE (1) FOOT ABOVE TOP OF PIPE WITH BANK SAND. TRENCHES UNDER OR WITHIN ONE (1) FOOT OF PROPOSED OR FUTURE PAVEMENT, BACKFILL FROM TOP OF BANK SAND TO BOTTOM OF PROPOSED SUBGRADE UNDER PAVEMENT WITH CEMENT STABILIZED SAND (1.1 SACKS OF CEMENT PER TON OF SAND).
15. ALL FIRE HYDRANTS ARE TO BE LOCATED AS SHOWN ON THE PLANS AND SET THREE (3) FEET BEHIND THE CURB OR AT APPROVED LOCATION ON RURAL ROADS. ALL FIRE HYDRANTS SHALL BE OF THE DESIGNATED TYPE, AND AUDITED AND PAINTED AS PER CITY OF FRIENDSWOOD TECHNICAL SPECIFICATIONS.
16. ALL TAPPING SLEEVES SHALL BE STAINLESS STEEL FULL CIRCLE WITH MECHANICAL JOINT TAPPING SLEEVE.
17. THE CONTRACTOR SHALL NOT OPERATE EXISTING CITY WATER VALVES. THE CONTRACTOR SHALL NOTIFY THE CITY OF FRIENDSWOOD ENGINEERING DEPARTMENT A MINIMUM OF TWENTY-FOUR (24) HOURS PRIOR TO ANY VALVE OPERATION NECESSARY FOR THE PROJECT. IF ANY VALVE CLOSING WILL RESULT IN INTERRUPTED SERVICE TO RESIDENTS OR BUSINESSES, THE CONTRACTOR SHALL BE RESPONSIBLE FOR PROVIDING PROPER NOTICE TO THE AFFECTED PARTIES.
18. FOR ALL CONSTRUCTION WATER USAGE ON THE PROJECT, A FIRE HYDRANT METER SHALL BE OBTAINED FROM THE CITY OF FRIENDSWOOD PUBLIC WORKS DEPARTMENT AT 15355 BLACKHAWK BLVD (281-996-3380). A DEPOSIT SHALL BE REQUIRED FOR THE METER AND A FEE SHALL BE CHARGED FOR ALL METERED WATER USAGE. THE CONTRACTOR SHALL SUPPLY A BACKFLOW PREVENTER FOR THE FIRE HYDRANT METER.
19. ALL SPRINKLER AND IRRIGATION LINES SHALL BE EQUIPPED WITH A BACKFLOW PREVENTION DEVICE ACCORDING TO IT'S APPLICATION AS REQUIRED BY TCEQ.
20. BLUE REFLECTORIZED PAVEMENT MARKERS SHALL BE PLACED ADJACENT TO THE FIRE HYDRANTS AND AT A POINT OFFSET SIX (6) INCHES FROM THE CENTERLINE OF THE ROADWAY (REFLECTOR SURFACES TO FACE TRAFFIC FLOW).
21. BACKFLOW PREVENTERS SHALL BE INSTALLED INSIDE THE BUILDING.
22. WHERE THE FIRE LINE EXCEEDS SIXTY (60) FEET FROM THE TAP TO THE RISER, THE BACKFLOW PREVENTER SHALL BE INSTALLED IN A VAULT AT THE PROPERTY LINE.
23. CONTROL VALVES FOR FIRE SPRINKLER SYSTEMS SHALL BE INSTALLED INSIDE THE BUILDING.
24. ALL VALVES CONTROLLING THE WATER SUPPLY FOR AN AUTOMATIC SPRINKLER SYSTEM SHALL BE ELECTRICALLY SUPERVISED AT THE FIRE ALARM PANEL.
25. ALL PUMPS, TANKS, WATER LEVELS AND TEMPERATURES, CRITICAL AIR PRESSURES, AND WATER-FLOW SYSTEMS ON ALL SPRINKLER SYSTEMS SHALL BE SUPERVISED AT THE FIRE ALARM CONTROL PANEL.
26. RISER ROOM FOR THE SPRINKLER SYSTEM SHALL HAVE ACCESS FROM THE EXTERIOR OF THE BUILDING OR FROM A COMMON SPACE IN THE BUILDING. AT NO TIME SHALL AN ACCESS TO A RISER ROOM BE WITHIN A TENANT SPACE UNLESS THE BUILDING IS OCCUPIED BY A SINGLE TENANT.
27. THE FIRE DEPARTMENT CONNECTION (FDC) SHALL BE LOCATED AWAY FROM THE BUILDING AT LEAST ONE AND ONE-HALF (1½) TIMES THE HEIGHT OF THE BUILDING.
28. THE FDC SHALL BE ON THE STREET SIDE OF THE BUILDING.
29. THE FDC SHALL HAVE KNOX BOX LOCKING FDC CAPS.
30. A FIRE HYDRANT SHALL BE LOCATED WITHIN ONE HUNDRED (100) FEET OF THE FDC.
31. INSTALLATION OF PRIVATE FIRE SERVICE MAINS AND THEIR APPURTENANCES SHALL BE INSTALLED IN ACCORDANCE WITH IFC 2003 AND NFPA 24.
32. FIRE SERVICE LINES SHALL BE TESTED AT TWO HUNDRED (200) PSI FOR TWO (2) HOURS AND SHALL BE WITNESSED BY THE CITY FIRE MARSHAL.
33. WORKING PLANS SHALL BE SUBMITTED FOR APPROVAL BY THE CITY FIRE MARSHAL.
34. WORKING PLANS SHALL BE APPROVED, INSPECTED, AND TESTED BY THE CITY FIRE MARSHAL BEFORE THE BUILDING CAN BE OCCUPIED.
35. ALL VALVE OPERATING NUTS SHALL BE A MAXIMUM OF FOUR (4) FEET FROM TOP OF THE VALVE BOX. ANY EXTENSIONS REQUIRED TO ACHIEVE THE MAXIMUM LENGTH SHALL BE SUPPLIED BY THE CONTRACTOR AND ARE INCIDENTAL TO THE WORK.
36. CONTRACTOR SHALL BE RESPONSIBLE FOR VERIFYING THE LOCATION OF ALL EXISTING UTILITIES PRIOR TO EXCAVATION. DURING THE COURSE OF ANY AND ALL CLEARING, GRUBBING, FILL, GRADING, EXCAVATION OR OTHER CONSTRUCTION, CONTRACTOR SHALL ENSURE THAT STORM DRAINAGE PATHWAYS ARE MAINTAINED AND REMAIN OPEN TO ENSURE POSITIVE DRAINAGE AND THAT SUCH CONVEYANCES ARE NOT IMPEDED OR BLOCKED IN ANY WAY. STORM SEWER INLETS SHALL BE PROTECTED FROM ENTRY OF SILT, TRASH, DEBRIS, AND ANY SUBSTANCES DETERIOUS TO THE STORM SEWER SYSTEM AND/OR WATERWAYS RECEIVING STORM WATER RUNOFF. CONTRACTOR SHALL, AT COMPLETION OF WORK, FILL LOW SPOTS AND GRADE ALL RIGHTS-OF-WAY AND UTILITY EASEMENTS AND REGRADE/RESTORE DITCHES NECESSARY TO MAINTAIN AND/OR ESTABLISH POSITIVE DRAINAGE.

WATER DISTRIBUTION STANDARD DETAILS		ENGINEERING DEPARTMENT		
FILE NAME: 15-WDSD-2022.DWG	DATE APPROVED: FEBRUARY 27, 2026		PROJECT NUMBER:	DATE SUBMITTED:
	SCALE: NTS	REVISED DATE: FEBRUARY 2026		SHEET: 1 OF 2